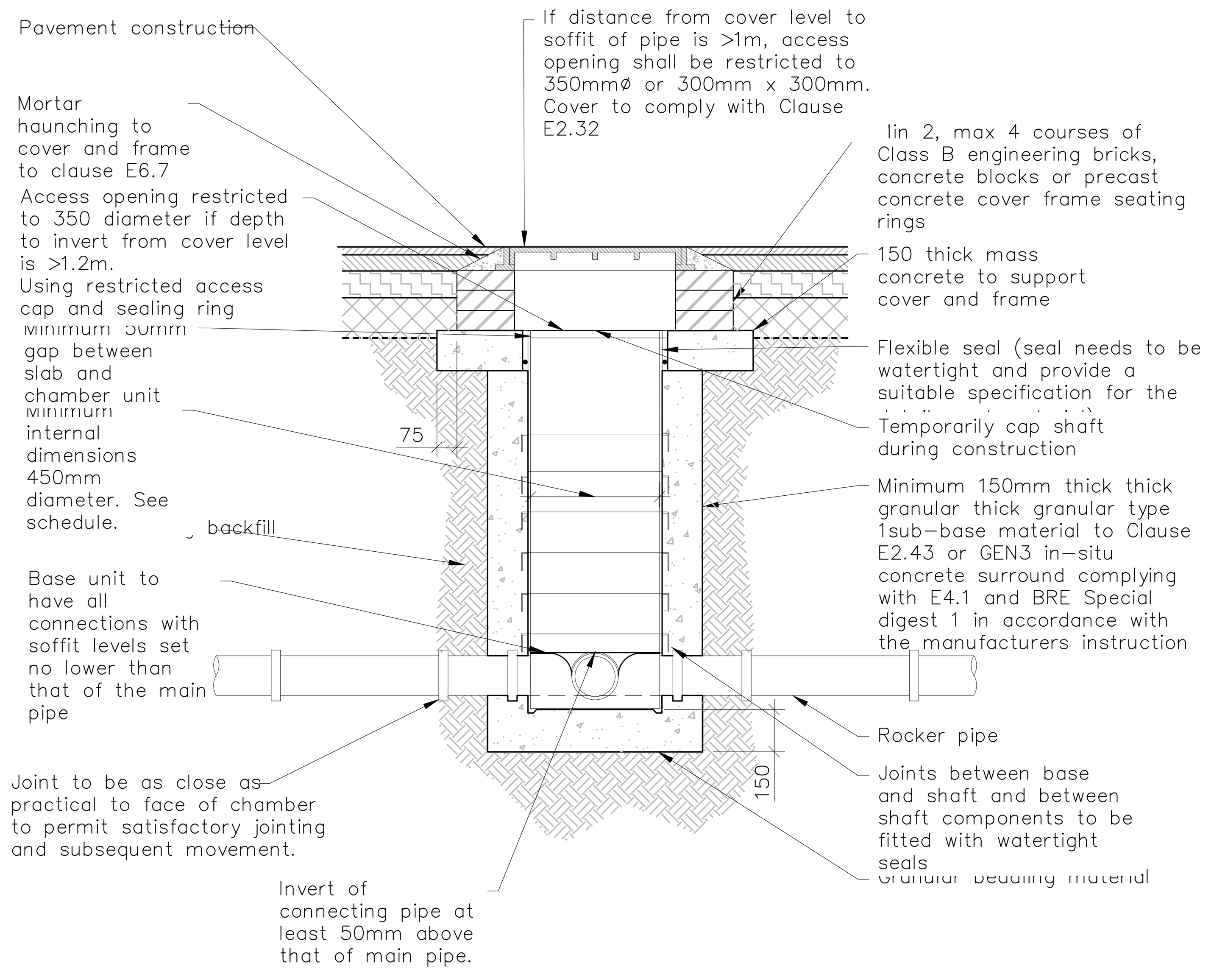

FIG B 18 – TYPE D – PLASTIC INSPECTION CHAMBER

FOR 450 DIAMETER CHAMBERS IN :–
- DOMESTIC DRIVEWAYS (B125) UP TO – 3.0m DEEP
- AREAS SUBJECT TO VEHICLE LOADING (D400) UP TO 3.0m DEEP

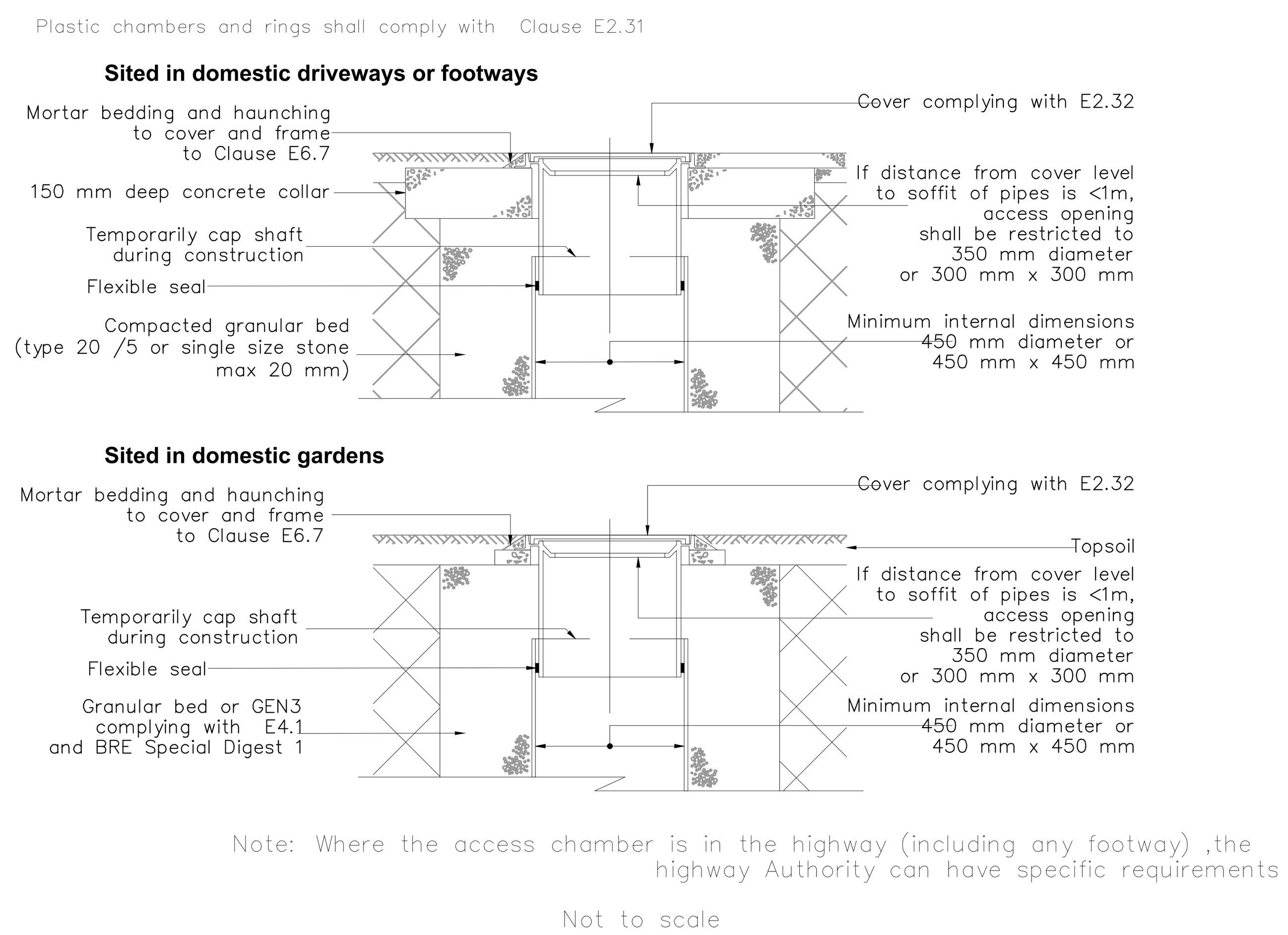

Note: Where the access chamber is in the highway (including any footway) ,the highway Authority can have specific requirements

Not to scale

FIGURE B 19 – TYPE D – TYPICAL INSPECTION CHAMBER DETAIL

Flexible material construction alternative top details for use in areas of light vehicle loading or landscaped areas

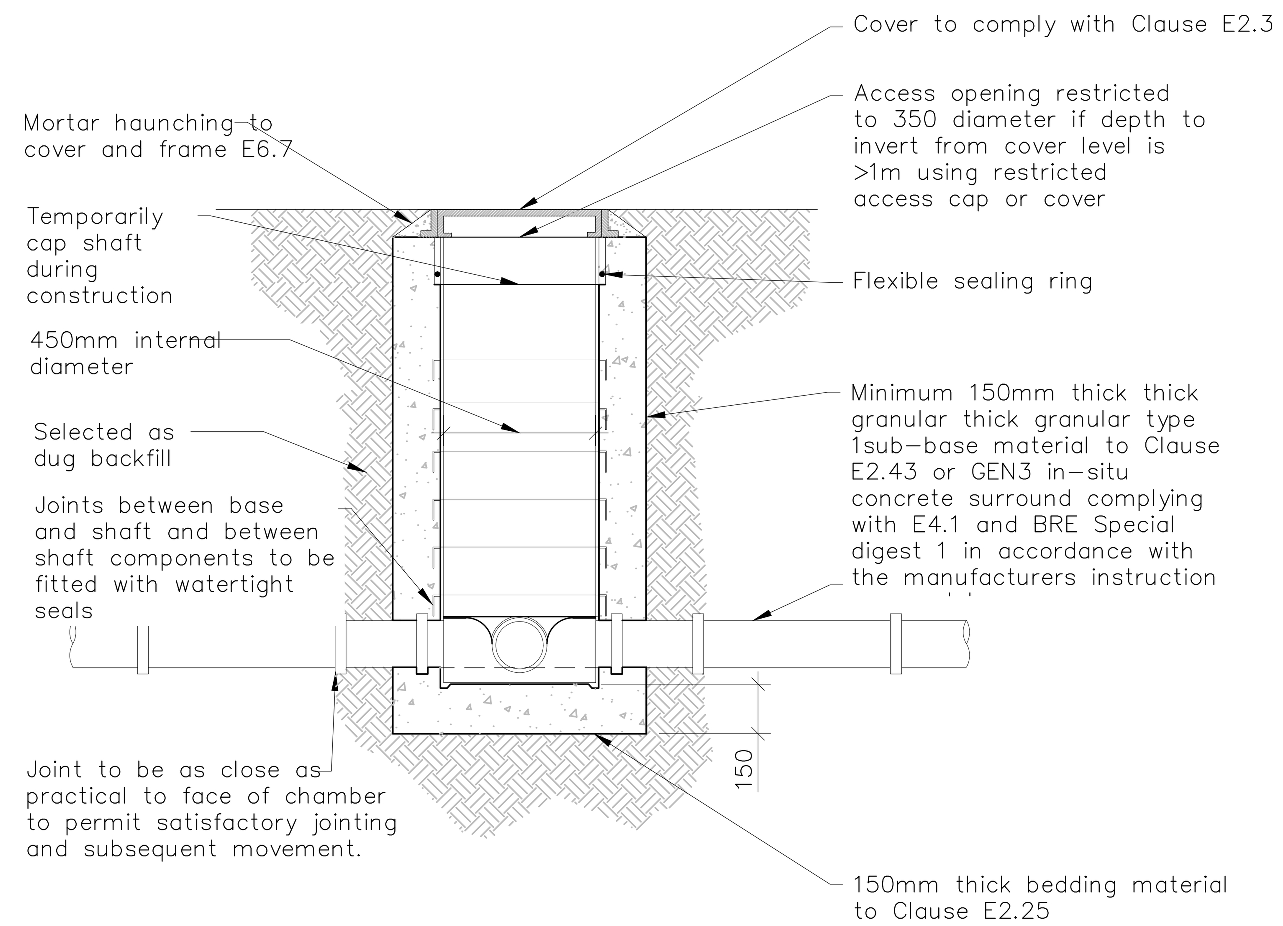

FIG B 23 – TYPE E – PLASTIC INSPECTION CHAMBER

FOR 450 DIAMETER CHAMBERS IN :–
- SOFT LANDSCAPING, PEDESTRIAN AREAS (A15) UP TO 2.0m DEEP

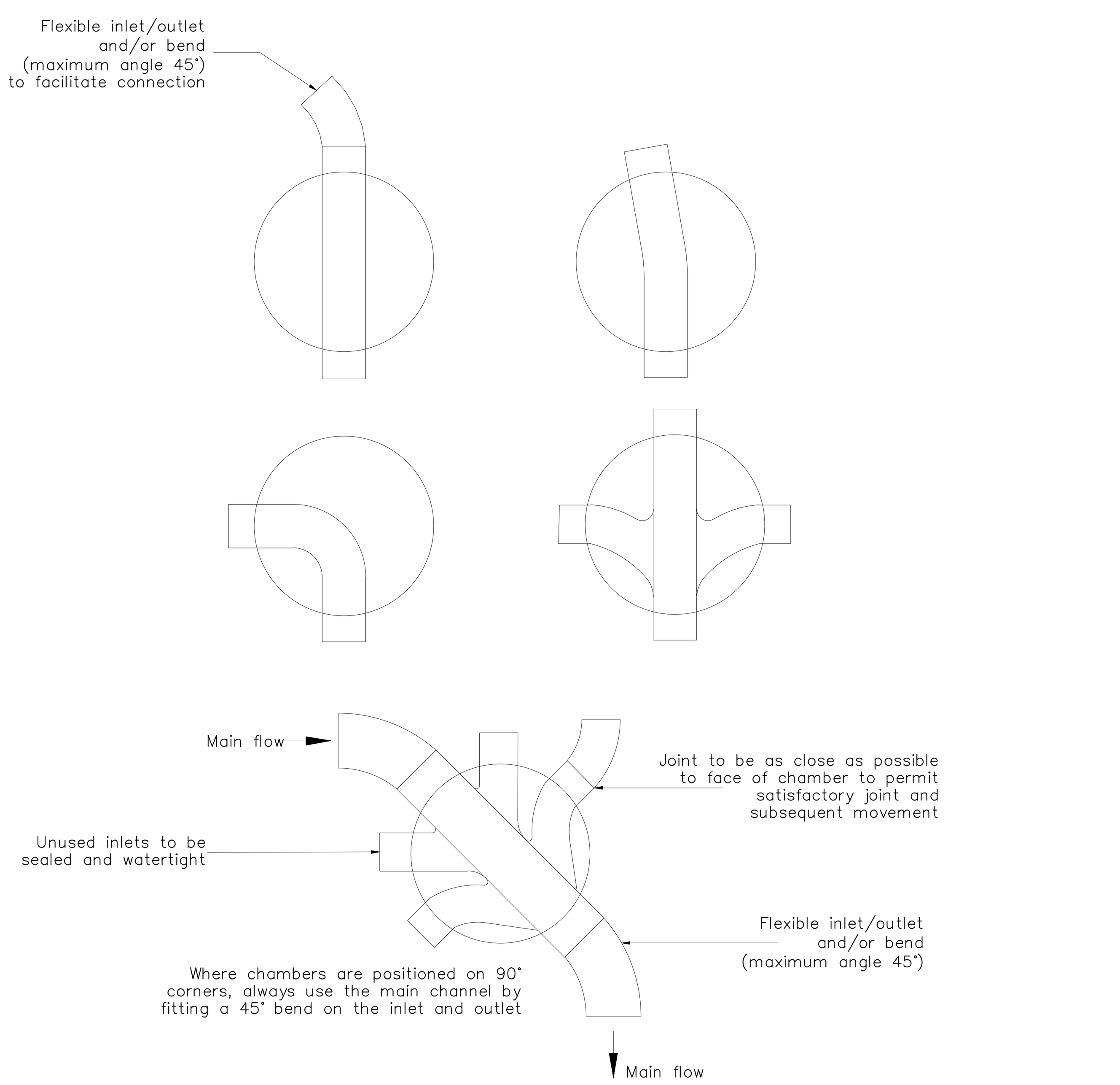

Note: Where a bend is used immediately outside the manhole, this may be used as the rocker pipe

Not to scale

FIGURE B 22 TYPICAL BASE LAYOUTS FOR TYPE D CHAMBERS

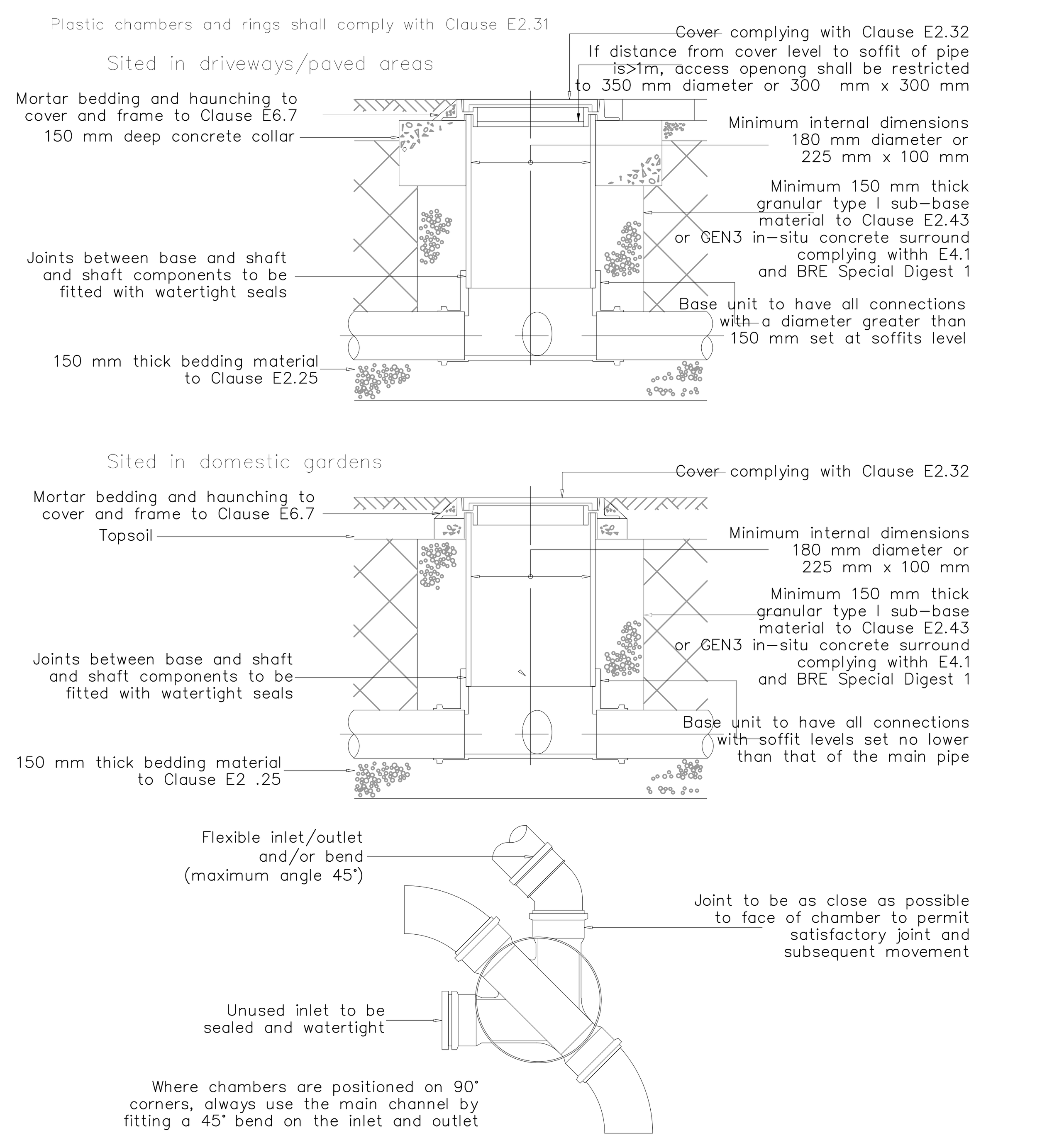

Note: Where the access chamber is in the highway (including any footway) the highway Authority can have specific requirements
Not to scale

FIGURE B 23 – TYPE E – TYPICAL INSPECTION CHAMBER DETAIL

FOR 450 DIAMETER CHAMBERS IN :–
- DEPTH FROM COVER LEVEL TO SOFFIT OF PIPE UP TO 2m

FLEXIBLE MATERIAL CONSTRUCTION

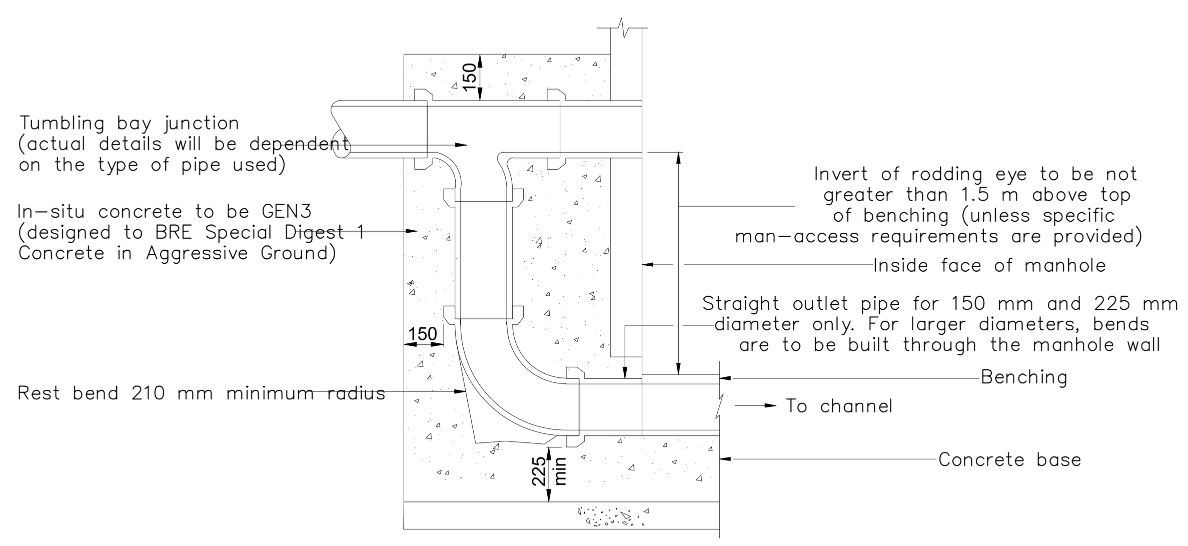

EXTERNAL VERTICAL BACKDROP

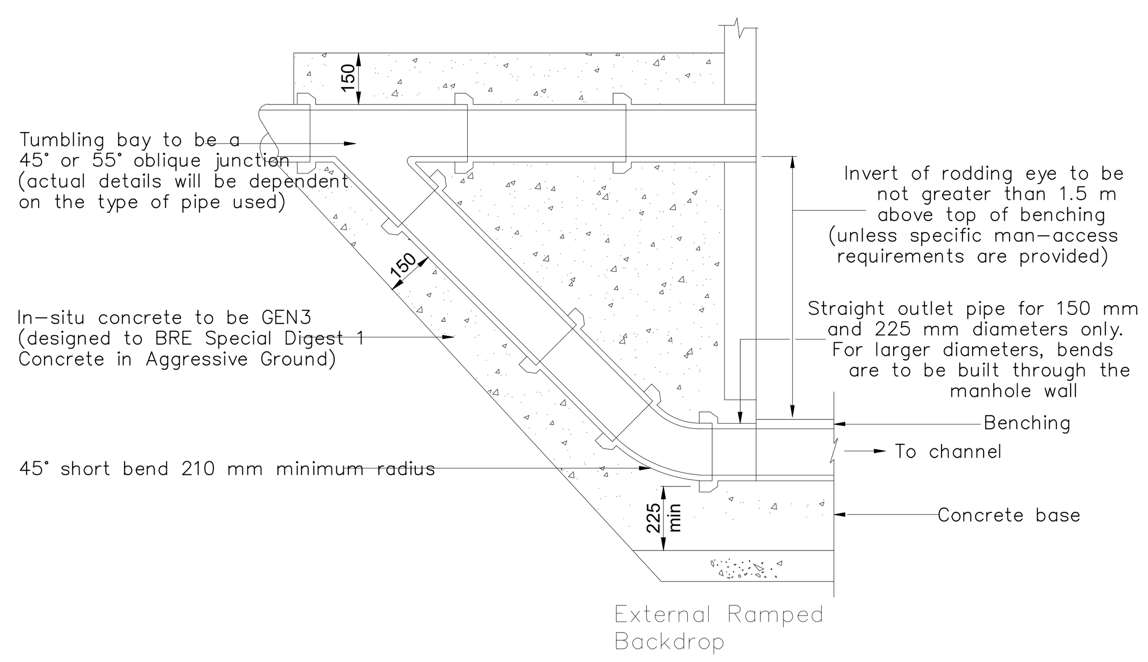

EXTERNAL RAMPED BACKDROP

Drawing produced for Chartway by:

Robert West
1 Paris Garden
London
SE1 8ND
t: 0203 773 7880
www.robertwest.co.uk

Disclaimer
This drawing is to be read in conjunction with all other relevant drawings and specifications.
Do not scale off this drawing. Use figured dimensions only. All levels and dimensions to be checked on site. All levels and dimensional discrepancies are to be brought to the immediate attention of Chartway Group.
Responsibility cannot be accepted for alteration and/or deviation from this design without prior acknowledgment of Chartway Group.
Copyright reserved. This drawing may only be used for the client and location specified in the title block. It may not be copied or disclosed to any other third party without prior written consent from Chartway Group.
Prior to any works commencing on site, The Engineer is to be contacted regarding the current status, revision or regulatory approval of this drawing.
All work to be to the entire satisfaction of the PREMIER/NHBC or Local Authority not withstanding anything shown or indicated on these drawings. All workmanship and materials to be the best of their respective kind and at least equivalent of the appropriate British Standard Code of Practice. All relevant dimensions and levels to be ascertained or checked and verified on site before specific areas of work are commenced.
This drawing to be read in conjunction with clients specification/employers requirements and structural engineers design details. Do not scale off this drawing, use figured dimensions only, all dimensional discrepancies to be brought to the immediate attention on Chartway Group.
WARNING TO HOUSE PURCHASERS PROPERTY MISDESCRIPTIONS ACT 1991
Buyers are warned that this is a working drawing and is not intended to be treated as descriptive material describing, in relation to any particular property or development, any of the specified matters prescribed by any order made under the above act. The contents of this drawing may be subject to change at any time and alterations and variations can occur during the process of works without revision of the drawing. Consequently the layout, form, content and dimensions of the finished construction may differ materially from those shown. Nor do the contents of this drawing constitute a contract, part of any contract or warranty.

GENERAL NOTES:

1. All dimensions to be checked on site. All details and dimensions relating to sub-Contractors work must be checked and agreed between the sub-Contractor or supplier and the general Contractor.

2. This drawing is to be read in conjunction with all relevant Architect's and Engineer's drawings and specification.

3. The main Contractor is responsible for ensuring the stability of the structure whilst the works are in progress.

4. Any information given regarding existing underground services is given in good faith after consultation with the relevant authority. No liability is accepted by the Consultant and the main Contractor is responsible for obtaining and checking all information and taking due care and attention whilst undertaking the works.

CDM 2015 RESIDUAL RISKS
1. All areas of live traffic and pedestrian movements shall be subject to appropriate traffic management barriers and signs.
2. Access points onto live public highway.
3. Unauthorised access to the site must be prevented at all times
4. Existing road drainage to be maintained.
5. Be aware of possible live drainage flows and foul effluent during construction.
The Contractor shall assess and implement a safe working system and equipment (PPE) as necessary.

The above residual risks are for non-standard hazards. It is assumed that a competent contractor familiar with the construction of this type of work will be appointed who will be aware of the standard hazards.

Rev.	Description	Date	By

Status: PLANNING APPROVAL

CHARTWAY GROUP

Drawing Title:

SITE WIDE DRAINAGE CONSTRUCTION DETAILS SHEET 2

Scale @ A1:	1:20
Date:	Jun 2023

Drg No.	Revision
CON608-3892	P00

This drawing must be read in conjunction with relevant Chartway specifications an dstandrad details. This drawing is subject to copyright. Do not scale from this drawing