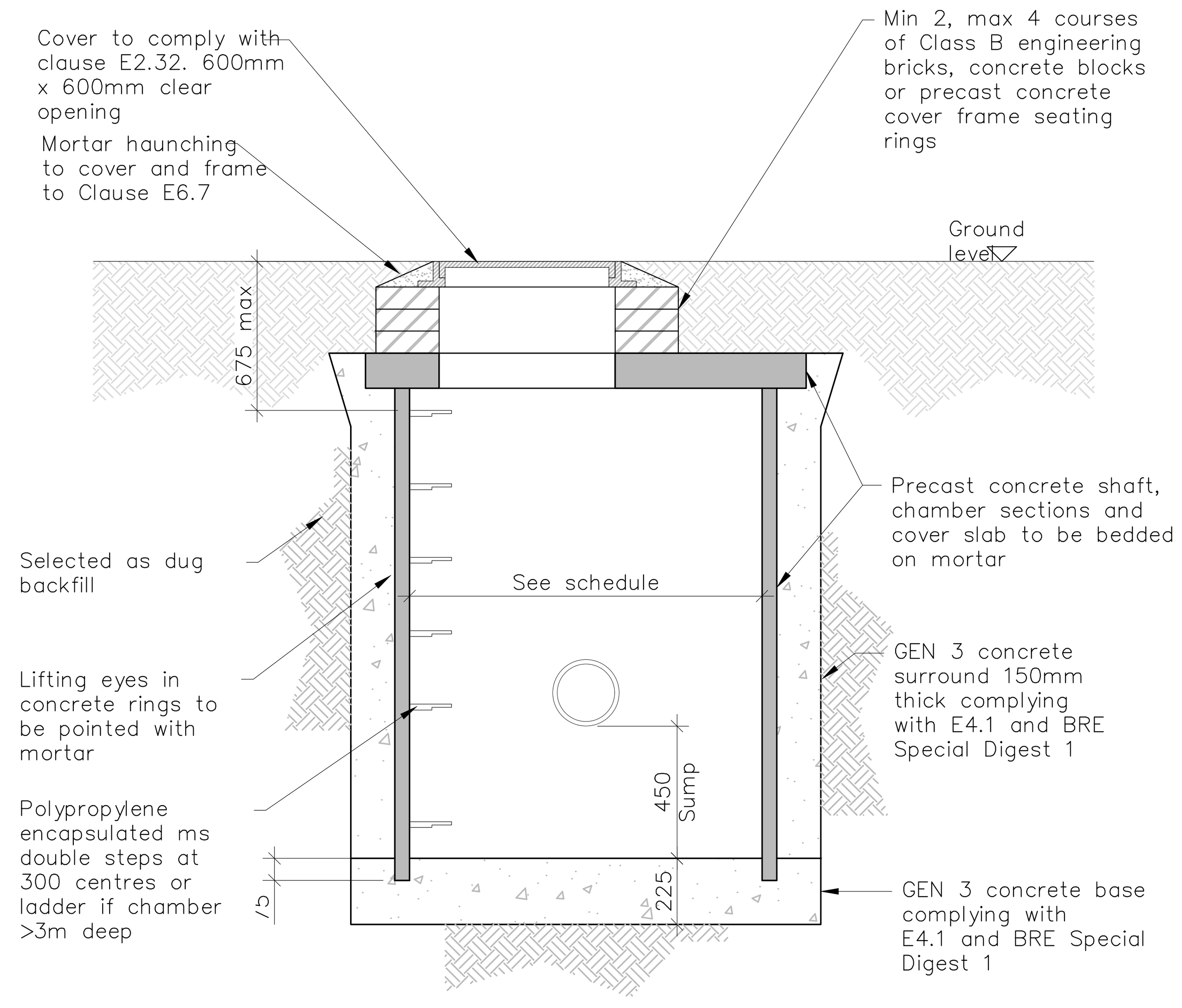

PRECAST CONCRETE CATCHPIT DETAIL

1. THIS DRAWING IS TO BE READ IN CONJUNCTION WITH ALL RELEVANT ENGINEER'S, ARCHITECT'S AND SPECIALIST'S DRAWINGS AND THE SPECIFICATION.
2. DO NOT SCALE FROM THIS DRAWING MANUALLY OR ELECTRONICALLY.
3. TYPE A TO BE 10MM SINGLE SIZED AGGREGATE TO BS EN 1610 ANNEX B TABLE B15 FOR 100Ø PIPES AND 14MM FOR 150Ø
4. TYPE B TO BE UNIFORM READILY COMPACTABLE MATERIAL FREE FROM ANY TREE ROOTS, VEGETATION MATTER, BUILDING DEBRIS, FROZEN SOIL, CLAY LUMPS RETAINED ON A 100MM SIEVE OR STONES RETAINED ON A 40MM SIEVE.
5. WHERE A FOUNDATION PASSES CLOSE TO A SEWER OR DRAIN TRENCH OR TRIAL PIT THE FOUNDATION DEPTH IS TO BE SUCH THAT ITS UNDERSIDE IS BELOW A LINE PROJECTED UP AT 45° FROM THE NEAREST BOTTOM CORNER OF THE DRAIN TRENCH, SEWER TRENCH OR TRIAL PIT OR CONCRETE BACKFILLTO TRENCHES USED AS DETAILED
6. ANY SOFT SPOT FOUND IN TRENCH LINE TO BE REPORTED TO SITE STAFF PRIOR TO PLACING OF PIPE BEDDING.
7. JOINT FILLER TO CONCRETE PIPE SURROUND SHALL CONSIST OF BITUMEN IMPREGNATED INSULATING BOARD TO BS 1142 PART 3. THICKNESS OF BOARD 12MM.
8. ALL PIPEWORK SHALL BE CONSTRUCTED FROM 'SUPER STRENGTH' VITRIFIED CLAY TO BS 65,BS EN 295 OR UPVC TO BS EN 1401
9. PRECAST CONCRETE PIPES AND CHAMBERS TO BE TO BS 5911.

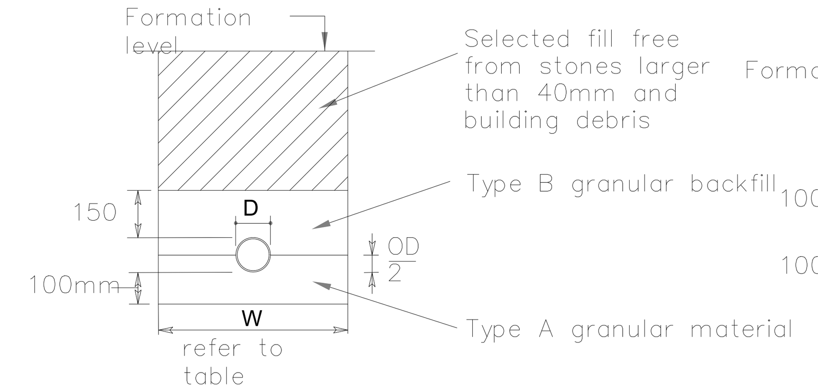

TYPE 1 (RIDGED PIPE)
CLASS B
Location: Pedestrian areas up to 5.0m depth, Vehicle areas 0.6m – 5.0m

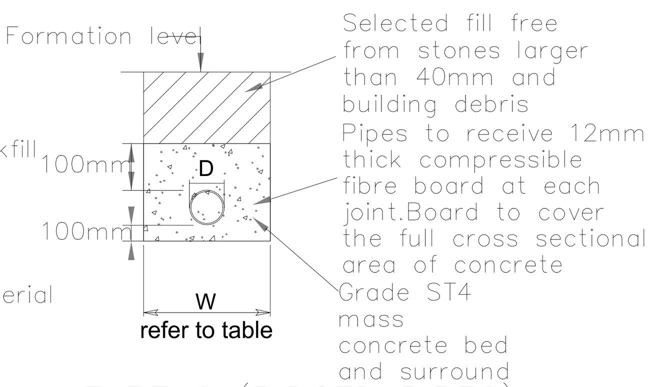

TYPE 2 (RIDGED PIPES)
CLASS X
Location: Vehicle areas – up to 0.6m

TYPICAL PIPE BEDDING DETAILS
(SCALE 1:20)

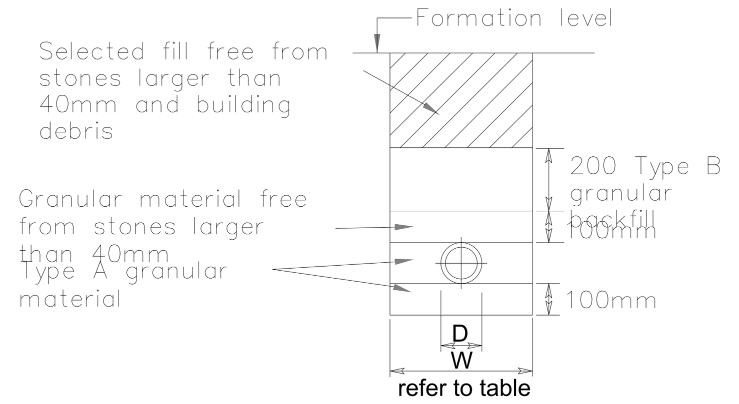

TYPE 3 (UPVC PIPES)
CLASS S1
Location: Pedestrian areas, 0.6m – 7.0m
Vehicle areas, 0.9m – 7.0m
Under buildings

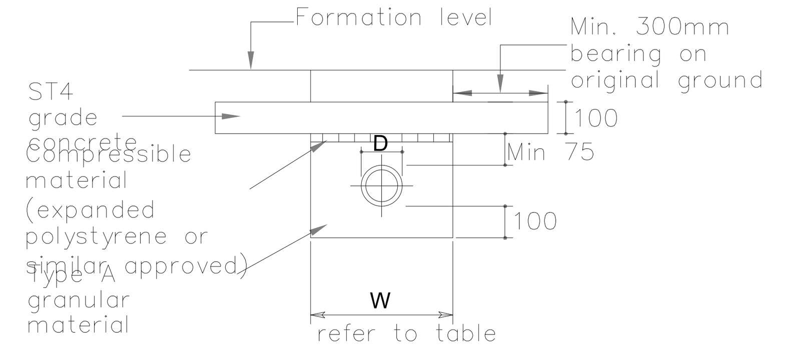

TYPE 4 (UPVC PIPES)
Location: Pedestrian areas up to 0.6m, private vehicle parking and areas subject to construction traffic up to 0.9m. When laid in landscape areas subject to no loading (incl. construction traffic) ST4 concrete can be omitted.

TABLE 1

DN	Minimum trench width (OD + x)		
	Supported trench	Unsupported trench	
		# > 60°	# < 60°
less 225	600	600	600
225 to 350	800	800	800
350 to 700	OD + 700	OD + 700	OD + 400
700 to 1200	OD + 850	OD + 850	
greater 1200	OD + 1000	OD + 1000	OD + 400

In the values OD + x, x/2 equals the minimum working space between the pipe and the trench wall or support, where:
OD is external diameter.
is angle of unsupported trench side measured to the horizontal.

MINIMUM TRENCH WIDTH IN RELATION TO NORMAL SIZE DN

TABLE 2

Trench depth	Minimum trench width
less 1000	As Table 1
1000 to 1750	800
1750 to 4000	900
greater 4000	1000

The minimum trench width shall be the greater of the values taken from tables 1 & 2.

MINIMUM TRENCH WIDTH IN RELATION TO TRENCH DEPTH

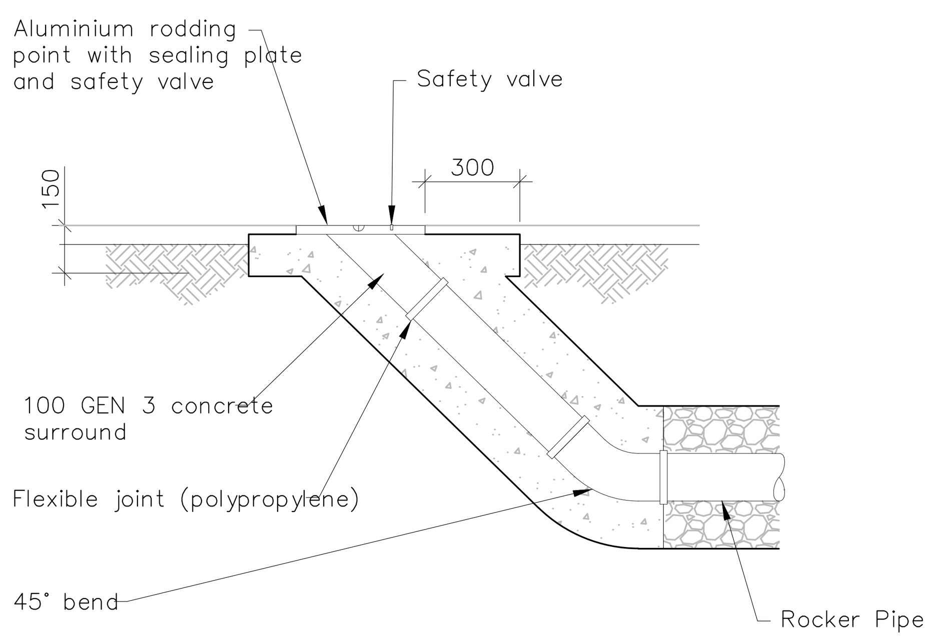

RODDING EYE

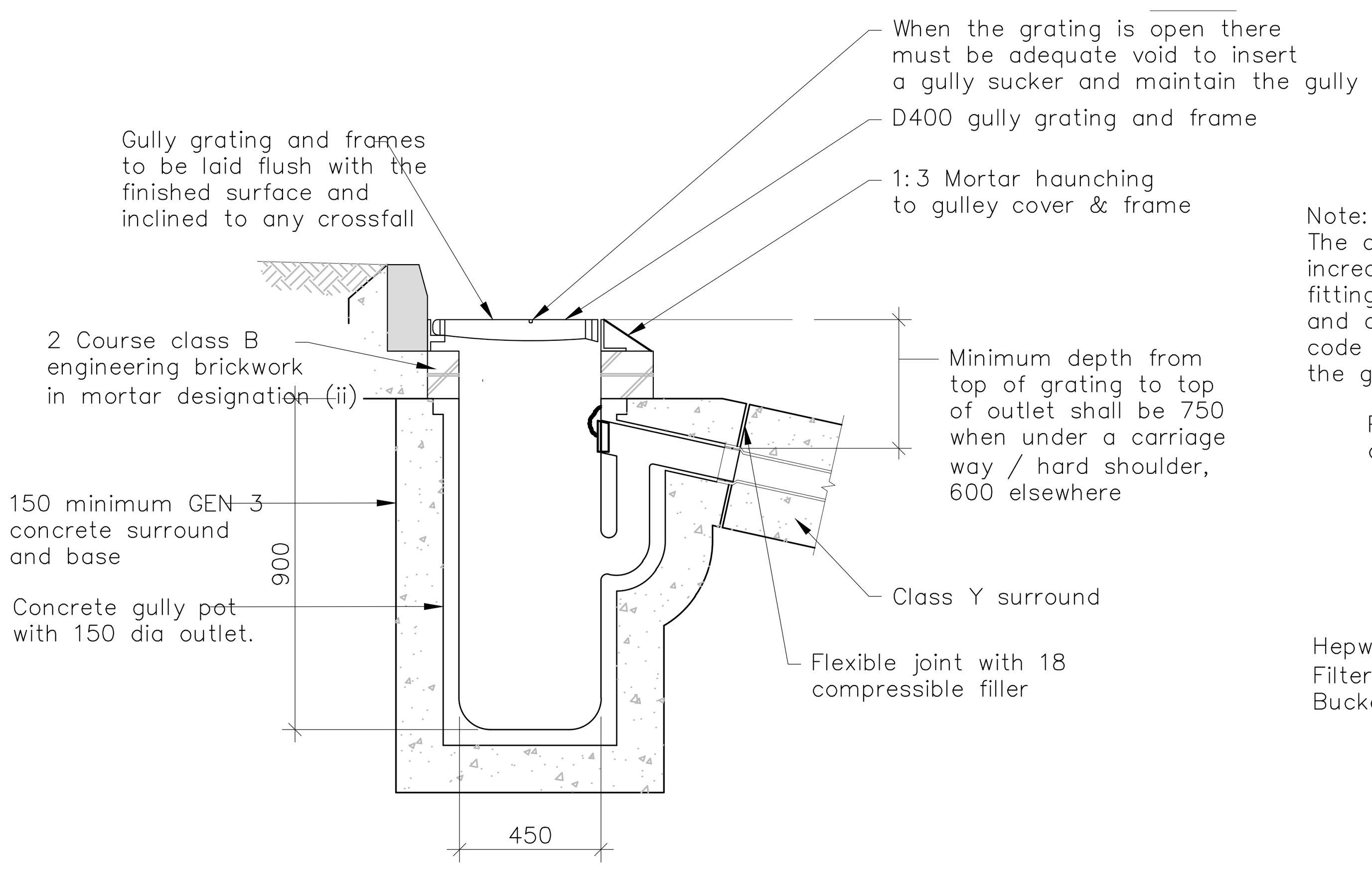

ROAD GULLY AT KERB

Note:–
The depth of the gully can be increased by up to 300 by fitting a 225 coupling code and a 300 high raising piece code between the frame and the gully body.

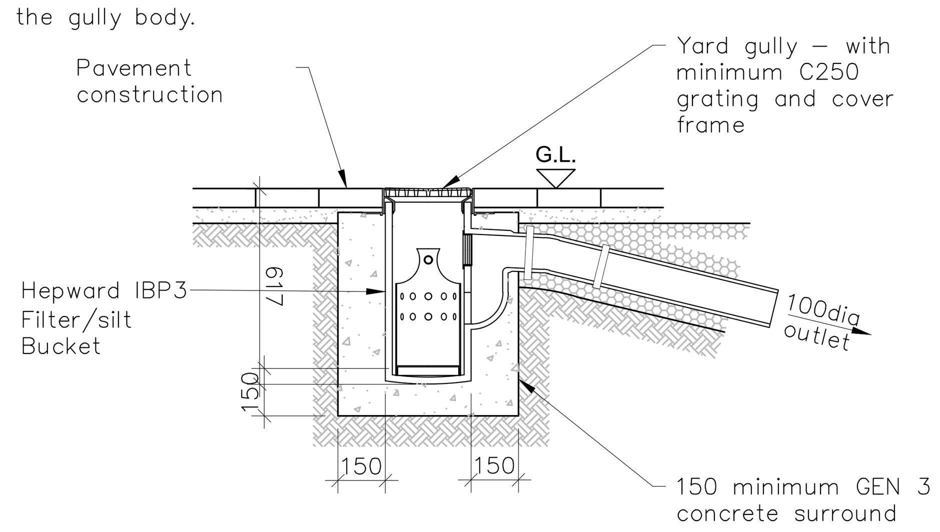

YARD GULLY

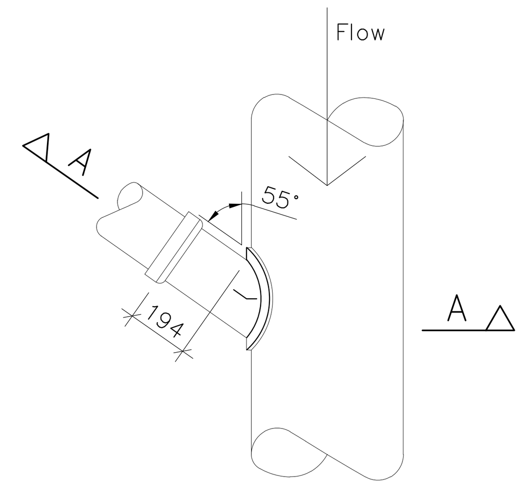

SADDLE CONNECTION – PLAN VIEW

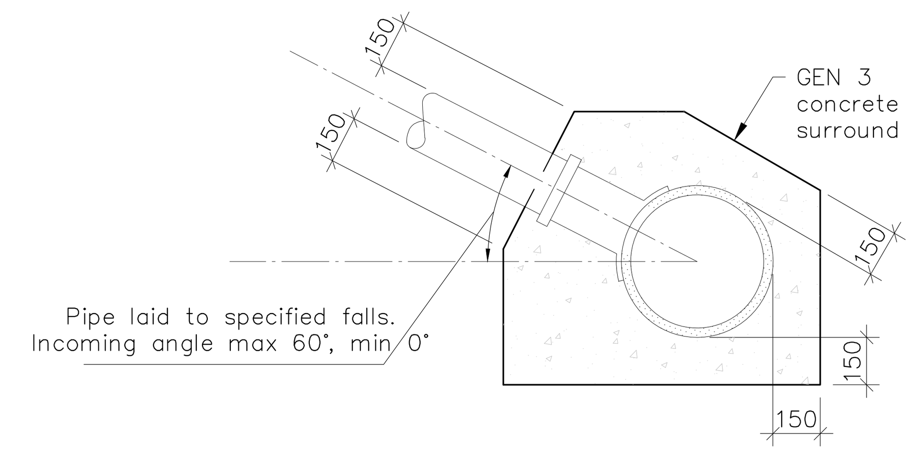

SADDLE CONNECTION SECTION A–A
SCALE 1:20

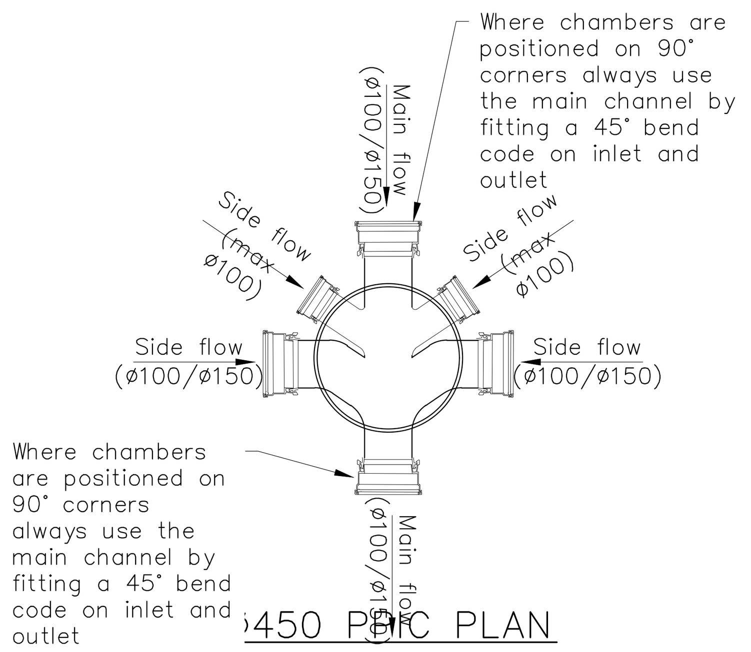

ø450 PPIC PLAN
ø150 MAIN CHANNEL, MAX 2 NO. (ø100 & ø150)
SIDE CONNECTIONS ON EACH SIDE
(50mm step height for all branch connections)

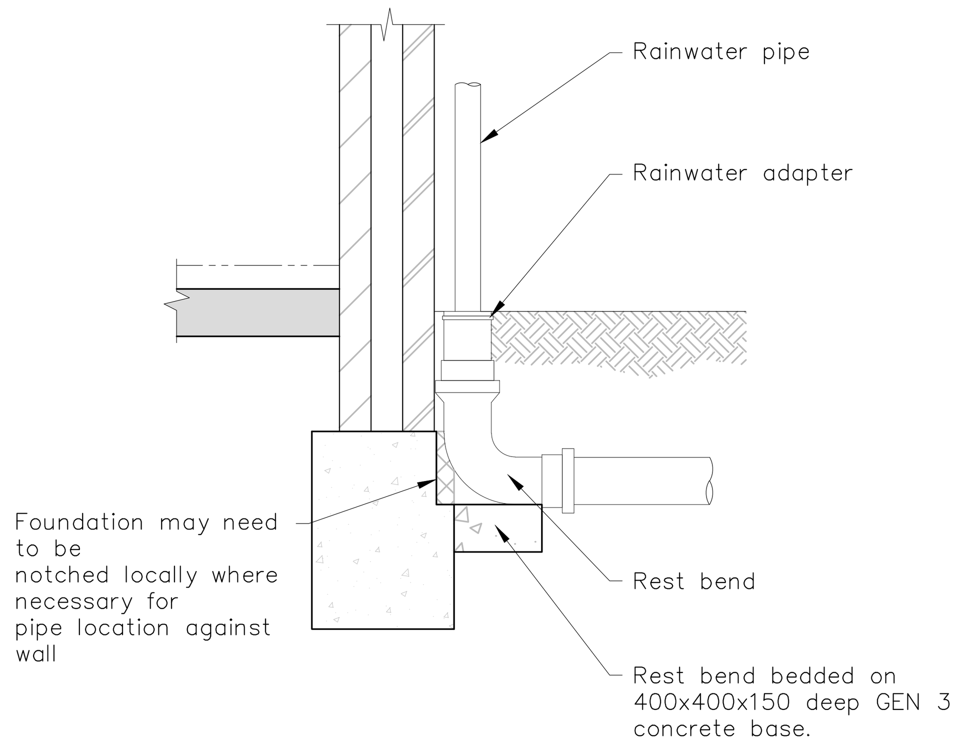

RAINWATER DOWN PIPE TO DRAIN (SURFACE WATER SYSTEM)

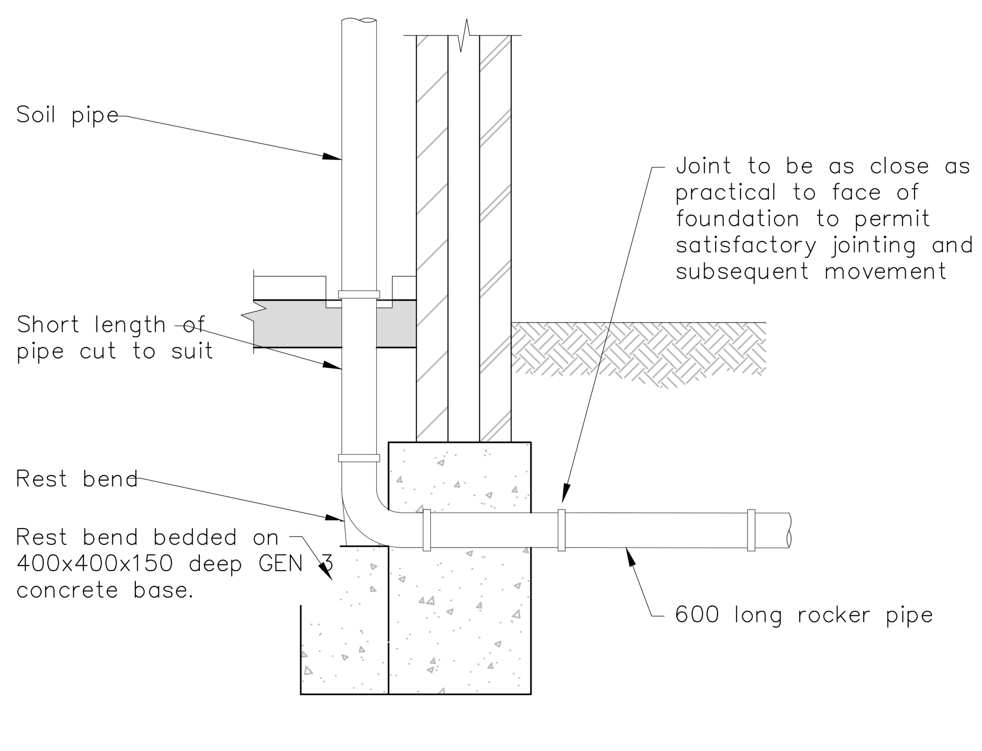

TYPICAL SOIL VENT PIPE/STUB STACK/WC DETAIL

Drawing produced for Chartway by:

Robert West
1 Paris Garden
London
SE1 8ND
t: 0203 773 7880
www.robertwest.co.uk

Disclaimer
This drawing is to be read in conjunction with all other relevant drawings and specifications.
Do not scale off this drawing. Use figured dimensions only. All levels and dimensions to be checked on site. All levels and dimensional discrepancies are to be brought to the immediate attention of Chartway Group.
Responsibility cannot be accepted for alteration and/or deviation from this design without prior acknowledgment of Chartway Group.
Copyright reserved. This drawing may only be used for the client and location specified in the title block. It may not be copied or disclosed to any other third party without prior written consent from Chartway Group.
Prior to any works commencing on site, The Engineer is to be contacted regarding the current status, revision or regulatory approval of this drawing.
All work to be to the entire satisfaction of the PREMIER/NHBC or Local Authority not withstanding anything shown or indicated on these drawings. All workmanship and materials to be the best of their respective kind and at least equivalent of the appropriate British Standard Code of Practice. All relevant dimensions and levels to be ascertained or checked and verified on site before specific areas of work are commenced.
This drawing to be read in conjunction with clients specification/employers requirements and structural engineers design details. Do not scale off this drawing, use figured dimensions only, all dimensional discrepancies to be brought to the immediate attention of Chartway Group.
WARNING TO HOUSE PURCHASERS PROPERTY MISDESCRIPTIONS ACT 1991
Buyers are warned that this is a working drawing and is not intended to be treated as descriptive material describing, in relation to any particular property or development, any of the specified matters prescribed by any order made under the above act. The contents of this drawing may be subject to change at any time and alterations and variations can occur during the process of works without revision of the drawing. Consequently the layout, form, content and dimensions of the finished construction may differ materially from those shown. Nor do the contents of this drawing constitute a contract, part of any contract or warranty.

GENERAL NOTES:

1. All dimensions to be checked on site. All details and dimensions relating to sub–Contractors work must be checked and agreed between the sub–Contractor or supplier and the general Contractor.

2. This drawing is to be read in conjunction with all relevant Architect's and Engineer's drawings and specification.

3. The main Contractor is responsible for ensuring the stability of the structure whilst the works are in progress.

4. Any information given regarding existing underground services is given in good faith after consultation with the relevant authority. No liability is accepted by the Consultant and the main Contractor is responsible for obtaining and checking all information and taking due care and attention whilst undertaking the works.

CDM 2015 RESIDUAL RISKS
1. All areas of live traffic and pedestrian movements shall be subject to appropriate traffic management barriers and signs.
2. Access points onto live public highway.
3. Unauthorised access to the site must be prevented at all times
4. Existing road drainage to be maintained.
5. Be aware of possible live drainage flows and foul effluent during construction.
The Contractor shall assess and implement a safe working system and equipment (PPE) as necessary.

The above residual risks are for non–standard hazards. It is assumed that a competent contractor familiar with the construction of this type of work will be appointed who will be aware of the standard hazards.

Rev.	Description	Date	By

Status: PLANNING APPROVAL

CHARTWAY GROUP

Drawing Title:
SITE WIDE DRAINAGE CONSTRUCTION DETAILS SHEET 3

Scale @ A1:	1:20
Date:	Jun 2023

Drg No.	Revision
CON608–3893	P00

This drawing must be read in conjunction with relevant Chartway specifications an dstandrad details. This drawing is subject to copyright. Do not scale from this drawing